H-Bridge Motor Drivers

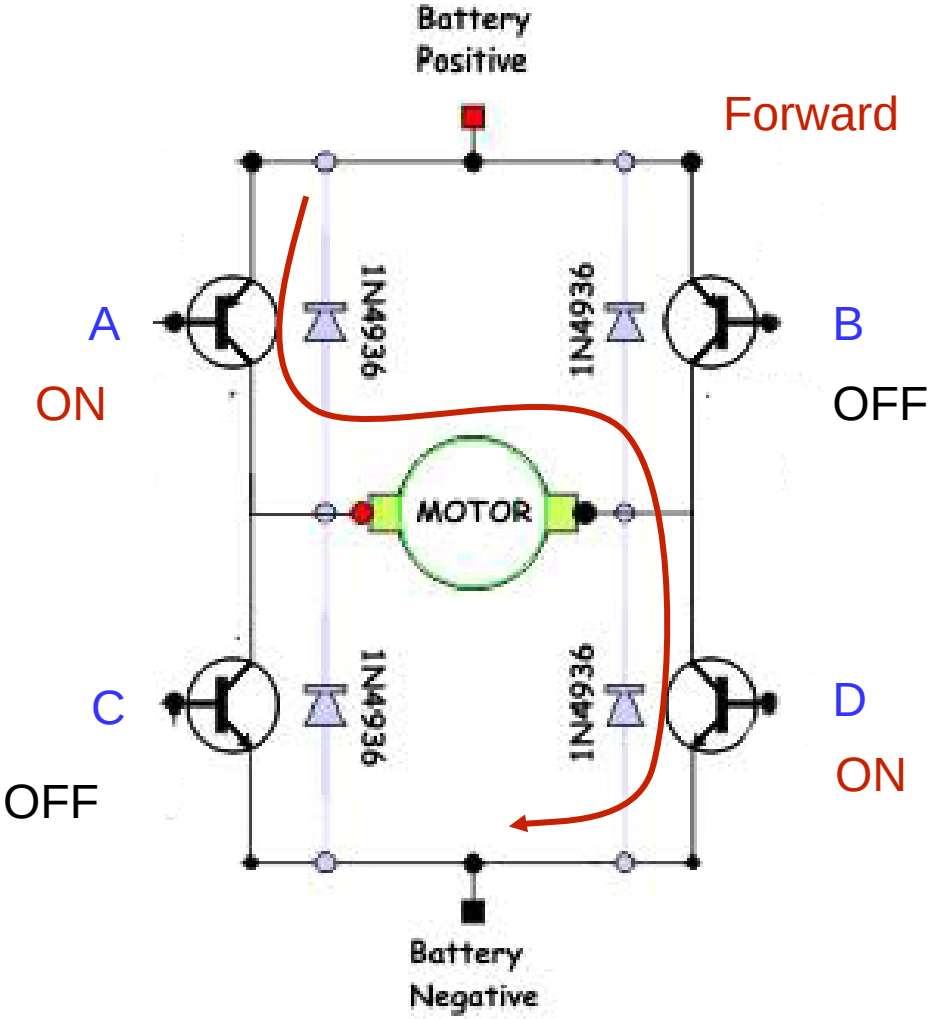

H-Bridge Motor Drivers

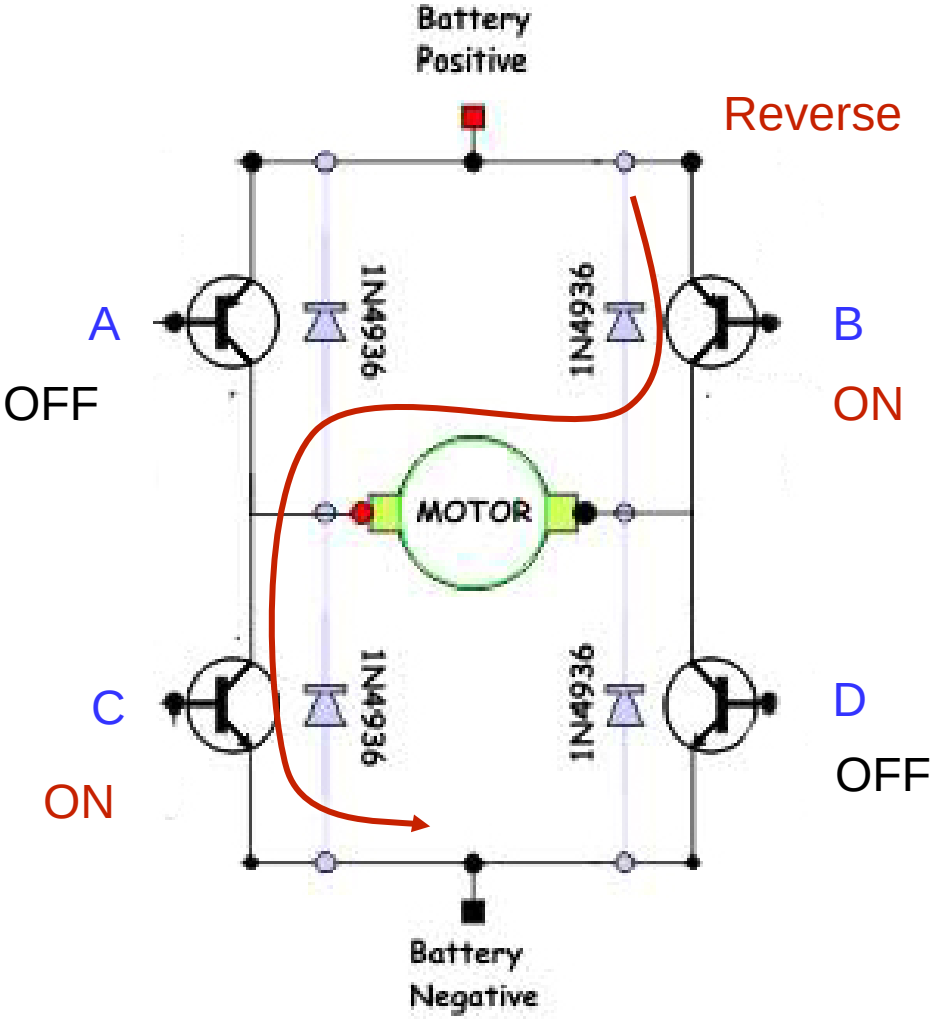

H-Bridge Motor Drivers

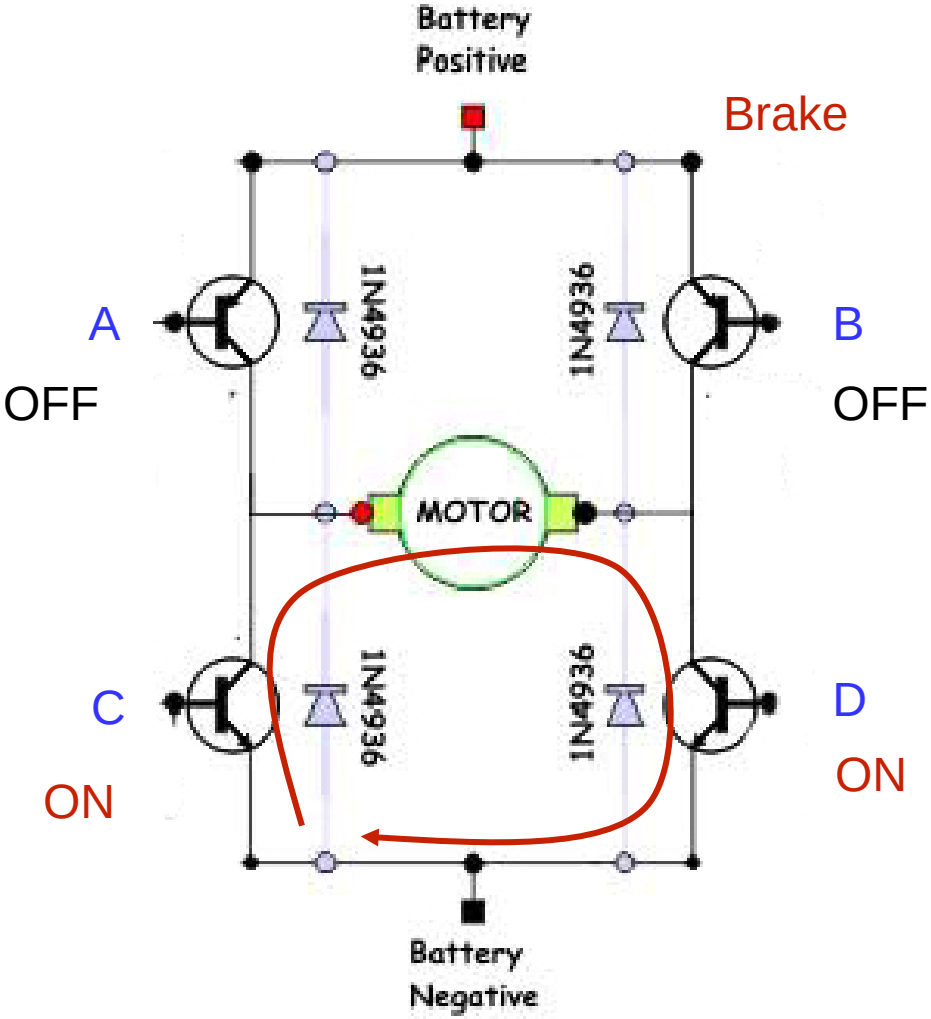

LMD18200

H-Bridge Functional Diagram

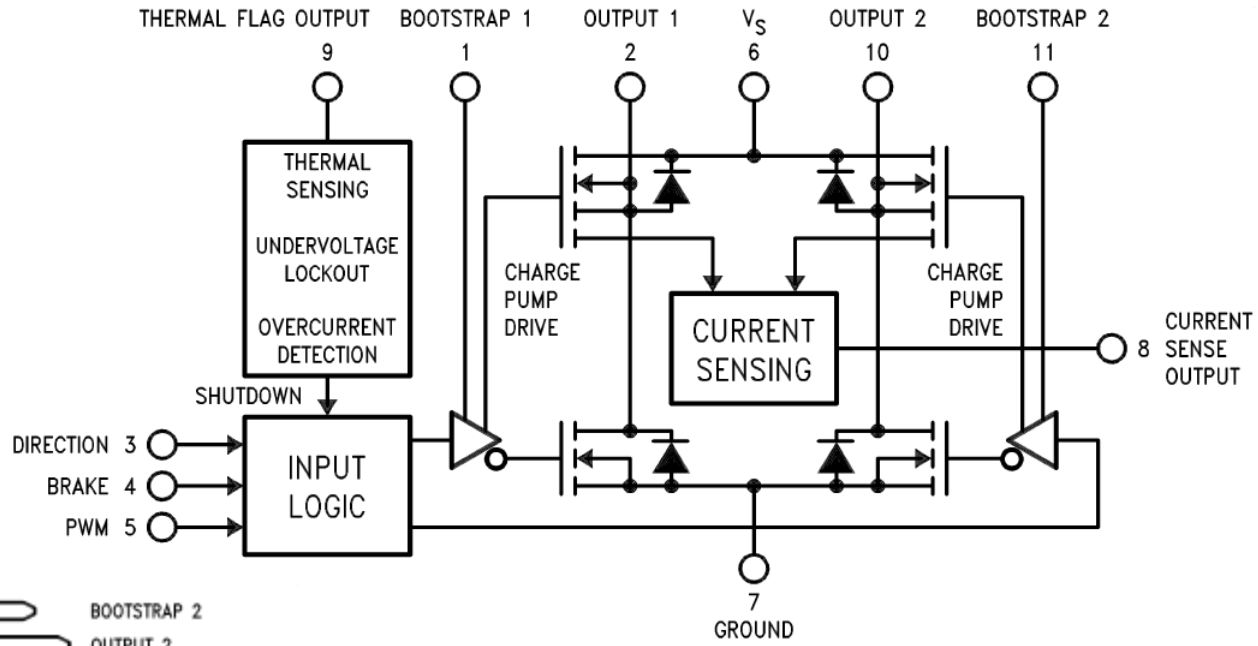

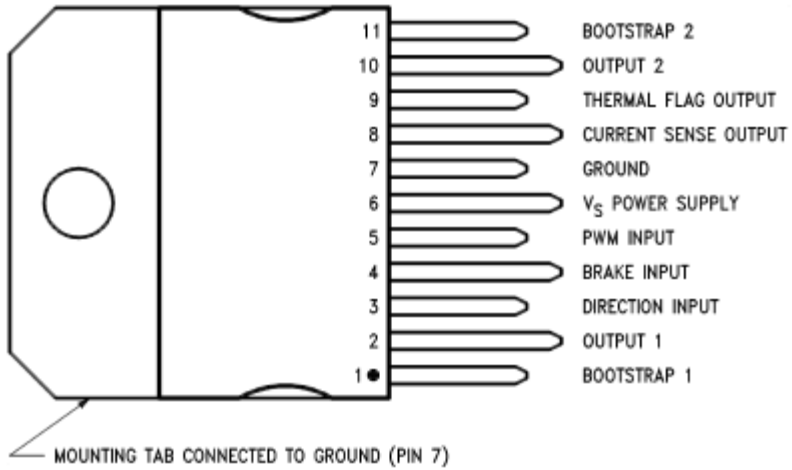

Pinout Description

(See Connection Diagram)

Pin 1, BOOTSTRAP 1 Input: Bootstrap capacitor pin for half H-bridge number 1. The recommended capacitor (10 nF) is connected between pins 1 and 2.

Pin 2, OUTPUT 1: Half H-bridge number 1 output.

Pin 3, DIRECTION Input: See *Table 1*. This input controls the direction of current flow between OUTPUT 1 and OUTPUT 2 (pins 2 and 10) and, therefore, the direction of rotation of a motor load.

Pin 4, BRAKE Input: See *Table 1*. This input is used to brake a motor by effectively shorting its terminals. When braking is desired, this input is taken to a logic high level and it is also necessary to apply logic high to PWM input, pin 5. The drivers that short the motor are determined by the logic level at the DIRECTION input (Pin 3): with Pin 3 logic high, both current sourcing output transistors are ON; with Pin 3 logic low, both current sinking output transistors are ON. All output transistors can be turned OFF by applying a logic high to Pin 4 and a logic low to PWM input Pin 5; in this case only a small bias current (approximately –1.5 mA) exists at each output pin.

Pin 5, PWM Input: See *Table 1*. How this input (and DIRECTION input, Pin 3) is used is determined by the format of the PWM Signal.

Pin 6, V_S Power Supply

Pin 7, GROUND Connection: This pin is the ground return, and is internally connected to the mounting tab.

Pin 8, CURRENT SENSE Output: This pin provides the sourcing current sensing output signal, which is typically 377 µA/A.

Pin 9, THERMAL FLAG Output: This pin provides the thermal warning flag output signal. Pin 9 becomes active-low at 145°C (junction temperature). However the chip will not shut itself down until 170°C is reached at the junction.

1056809

Pin 10, OUTPUT 2: Half H-bridge number 2 output.

Pin 11, BOOTSTRAP 2 Input: Bootstrap capacitor pin for Half H-bridge number 2. The recommended capacitor (10 nF) is connected between pins 10 and 11.

TABLE 1. Logic Truth Table

PWM	Dir	Brake	Active Output Drivers
H	H	L	Source 1, Sink 2
H	L	L	Sink 1, Source 2
L	X	L	Source 1, Source 2
H	H	H	Source 1, Source 2
H	L	H	Sink 1, Sink 2
L	X	H	NONE

Application Information

TYPES OF PWM SIGNALS

The LMD18200 readily interfaces with different forms of PWM signals. Use of the part with two of the more popular forms of PWM is described in the following paragraphs.

Simple, locked anti-phase PWM consists of a single, variable duty-cycle signal in which is encoded both direction and amplitude information (see *Figure 2*). A 50% duty-cycle PWM signal represents zero drive, since the net value of voltage (integrated over one period) delivered to the load is zero. For the LMD18200, the PWM signal drives the direction input (pin 3) and the PWM input (pin 5) is tied to logic high.

PMDC Motors

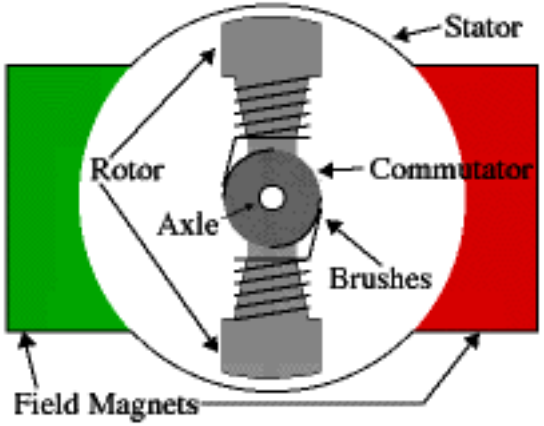

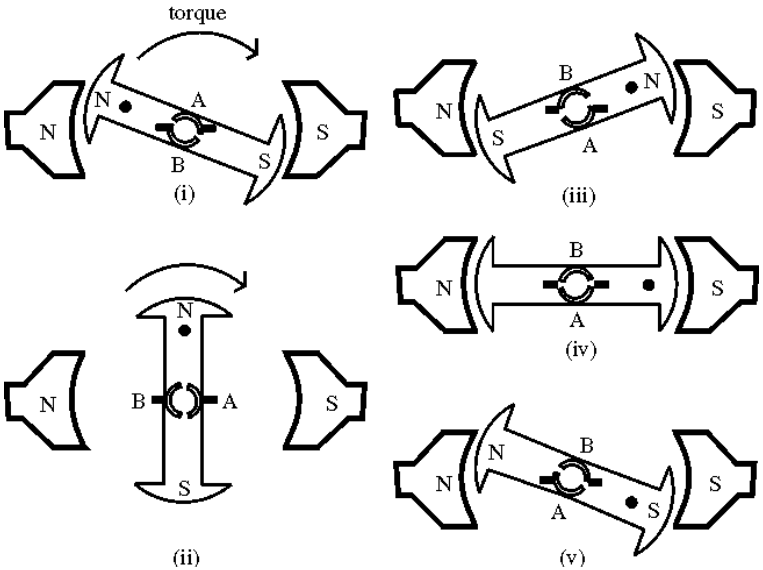

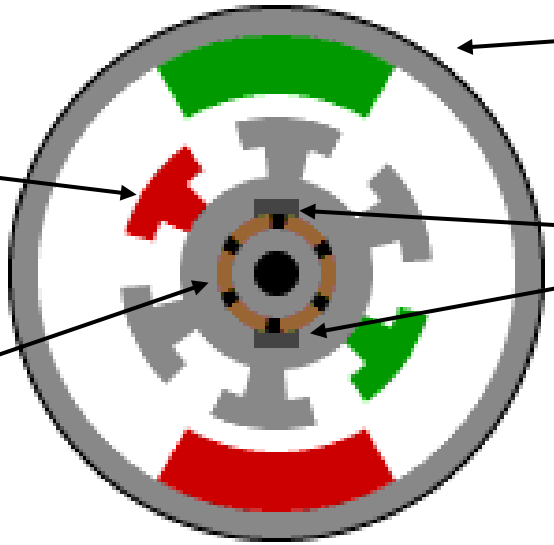

PMDC Motors

- Simple Model

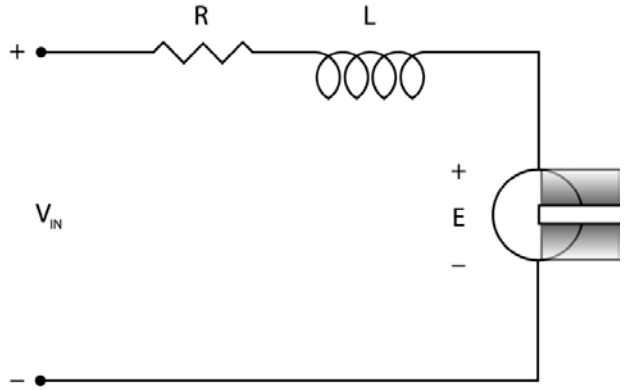

- More Complete Model

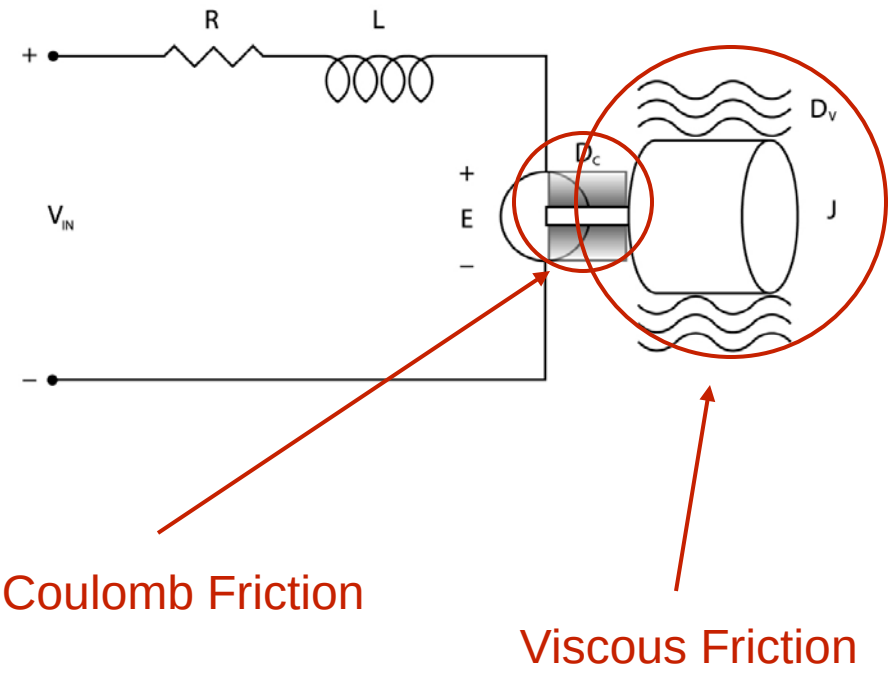

$$V_{in} = L\frac{dI}{dt} + RI + K_E\omega$$

$$\tau = K_T I$$

PMDC Motors

- More Complete Model

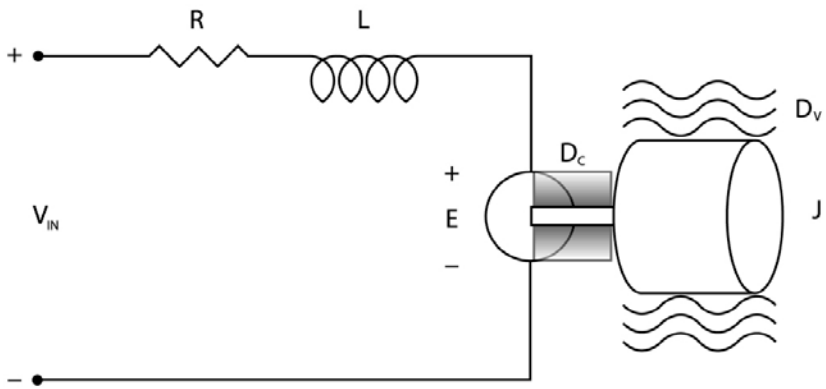

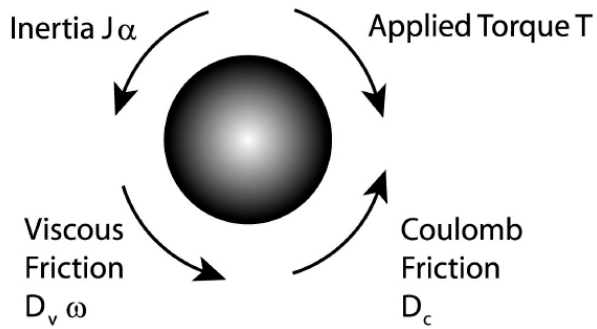

$$\tau = K_T I = J\alpha + D_\upsilon \omega + D_c sign(\omega)$$

$$V_{in} = L\frac{dI}{dt} + RI + K_E \omega$$

friction

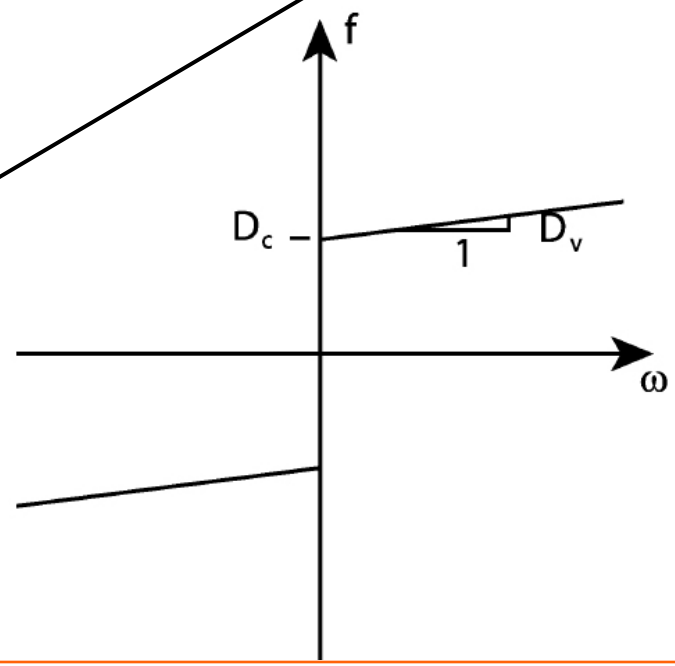

PMDC Motors

- DC Motor Specifications

			Winding number	930	933	934	948	936	944	937	938	945
Motor Data												
1	Assigned power rating	W		6.0	6.0	6.0	6.0	6.0	6.0	6.0	6.0	6.0
2	Nominal voltage	Volt		3.0	7.2	9.0	12.0	12.0	12.0	15.0	18.0	18.0
3	No load speed	rpm		5080	9270	9460	10700	8110	7770	8460	8240	8010
4	Stall torque	mNm		20.9	42.5	45.7	51.7	42.7	35.1	44.4	43.0	38.0
5	Speed/torque gradient	rpm/mNm		260	225	213	211	194	227	194	195	215
6	No load current	mA		114	101	83	73	50	47	42	34	33
7	Starting current	mA		3960	5910	5160	4920	3090	2440	2680	2100	1810
8	Terminal resistance	Ohm		0.757	1.22	1.74	2.44	3.88	4.92	5.60	8.56	9.96
9	Max. permissible speed	rpm		11000	11000	11000	11000	11000	11000	11000	11000	11000
10	Max. continuous current	mA		1500	1500	1440	1220	972	865	809	656	609
11	Max. continuous torque	mNm		7.92	10.8	12.7	12.8	13.4	12.4	13.4	13.4	12.8
12	Max. power output at nominal voltage	mW		2460	9620	10800	13900	8770	6920	9590	9070	7780
13	Max. efficiency	%		64	73	75	76	75	74	76	76	75
14	Torque constant	mNm/A		5.28	7.19	8.85	10.5	13.8	14.4	16.6	20.5	21.0
15	Speed constant	rpm/V		1810	1330	1080	909	691	664	576	467	455
16	Mechanical time constant	ms		29	22	20	19	18	18	18	18	18
17	Rotor inertia	gcm^2		10.8	9.23	9.07	8.68	9.07	7.76	8.84	8.63	7.87
18	Terminal inductance	mH		0.07	0.12	0.18	0.26	0.45	0.48	0.64	0.98	1.03
19	Thermal resistance housing-ambient	K/W		17	17	17	17	17	17	17	17	17
20	Thermal resistance rotor-housing	K/W		2.4	2.4	2.4	2.4	2.4	2.4	2.4	2.4	2.4
21	Thermal time constant winding	s		7	6	6	6	6	5	6	6	5

Brushless DC Motors

- Rotor with permanent magnets
- Stator with windings
- Essentially a DC motor turned inside out
- Control electronics take the place of brushes and commutators

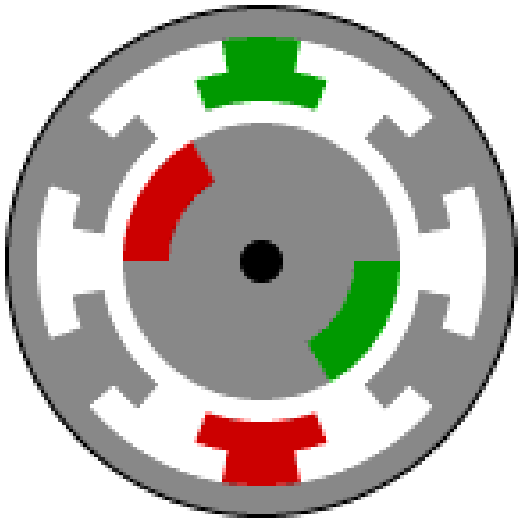

Brushless DC Motors

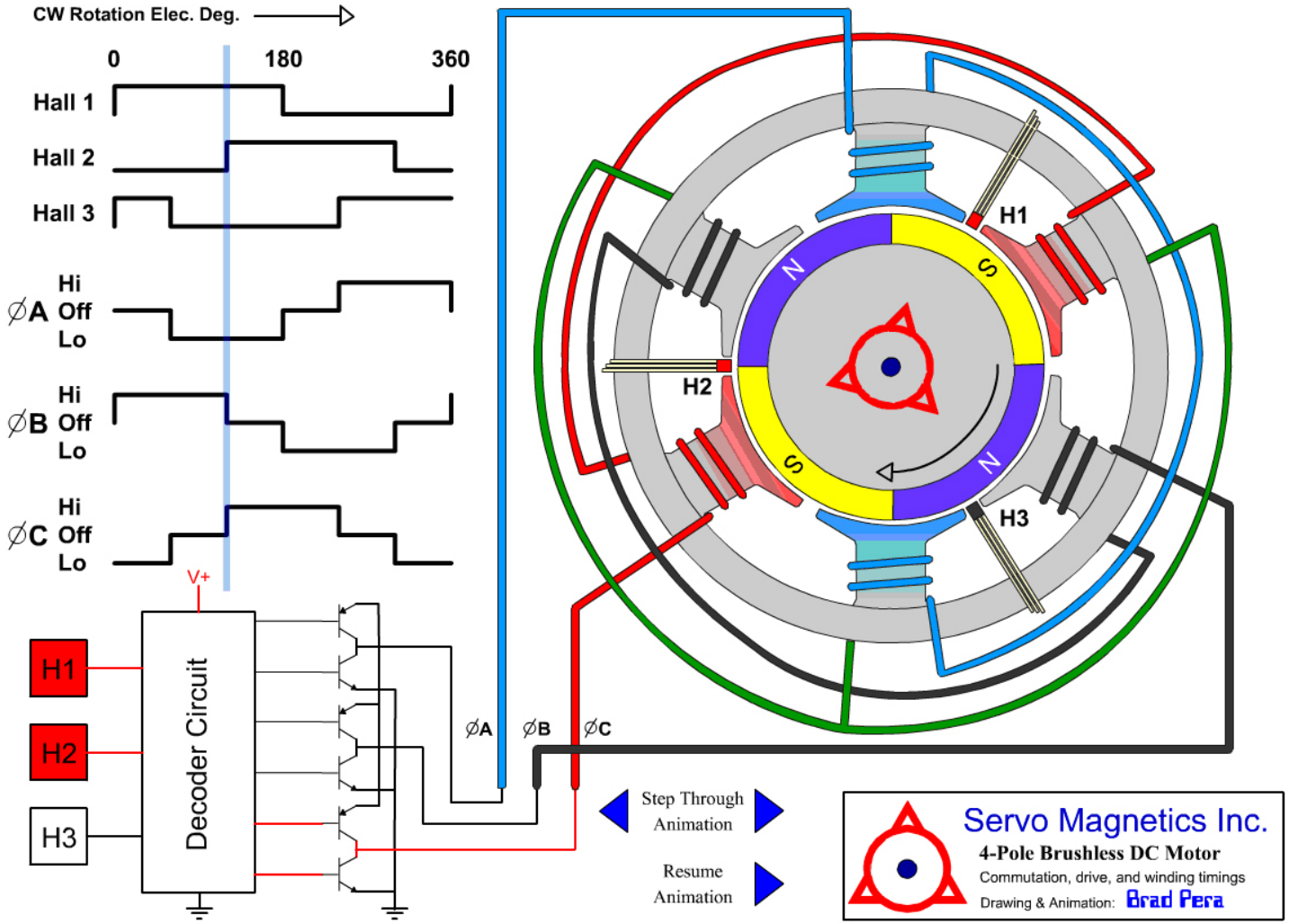

Stepper Motors

- Essentially a brushless DC motor with many more stator and rotor poles.

Phase ‘a’ energized

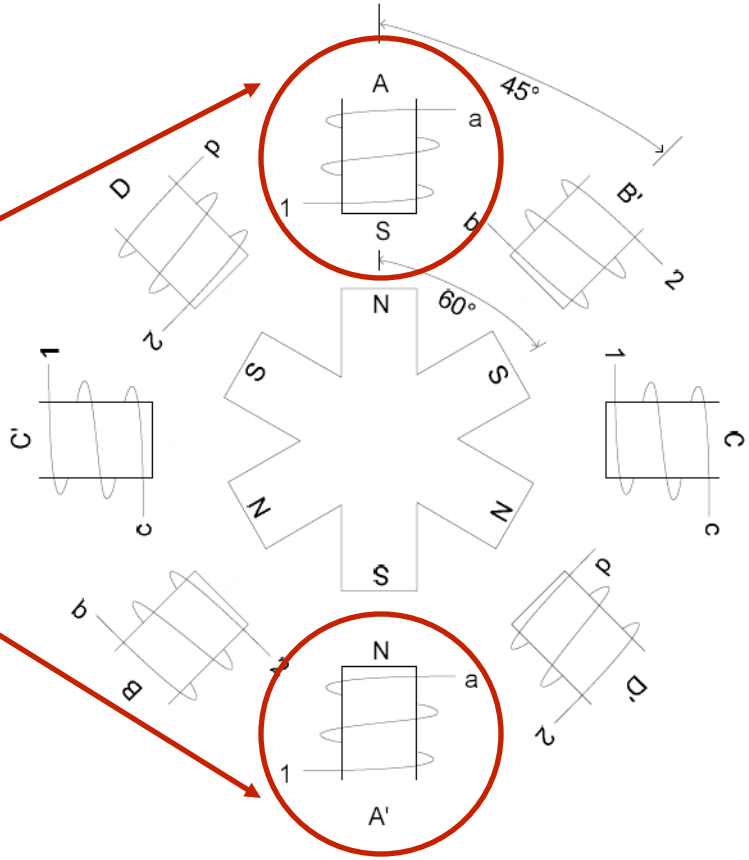

Stepper Motors

- Full Step Motor

Phase ‘b’ energized

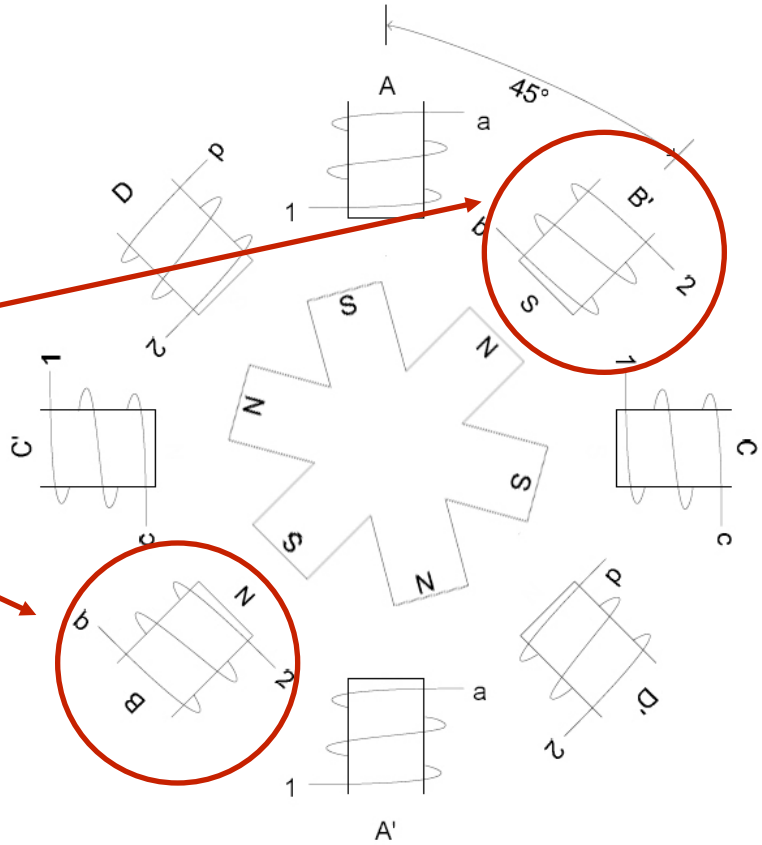

Stepper Motors

- Half Step Motor

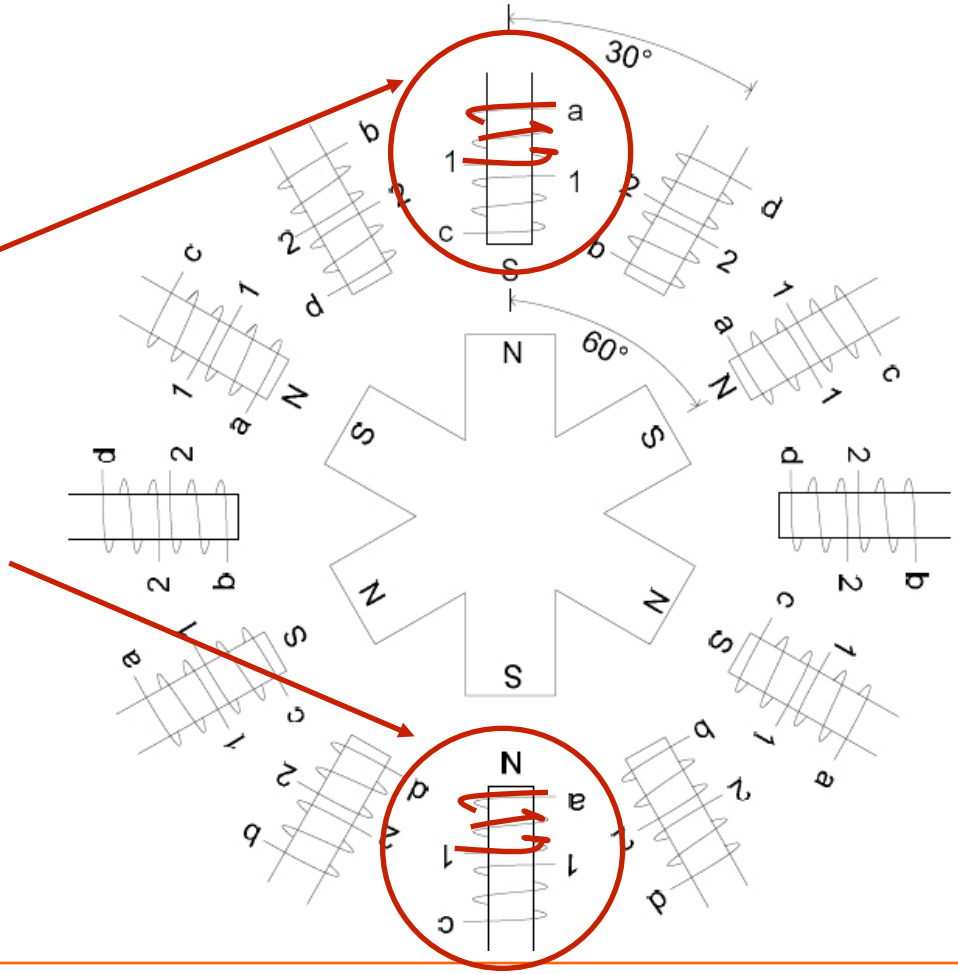

Phase ‘a’ energized

Stepper Motors

- Half Step Motor

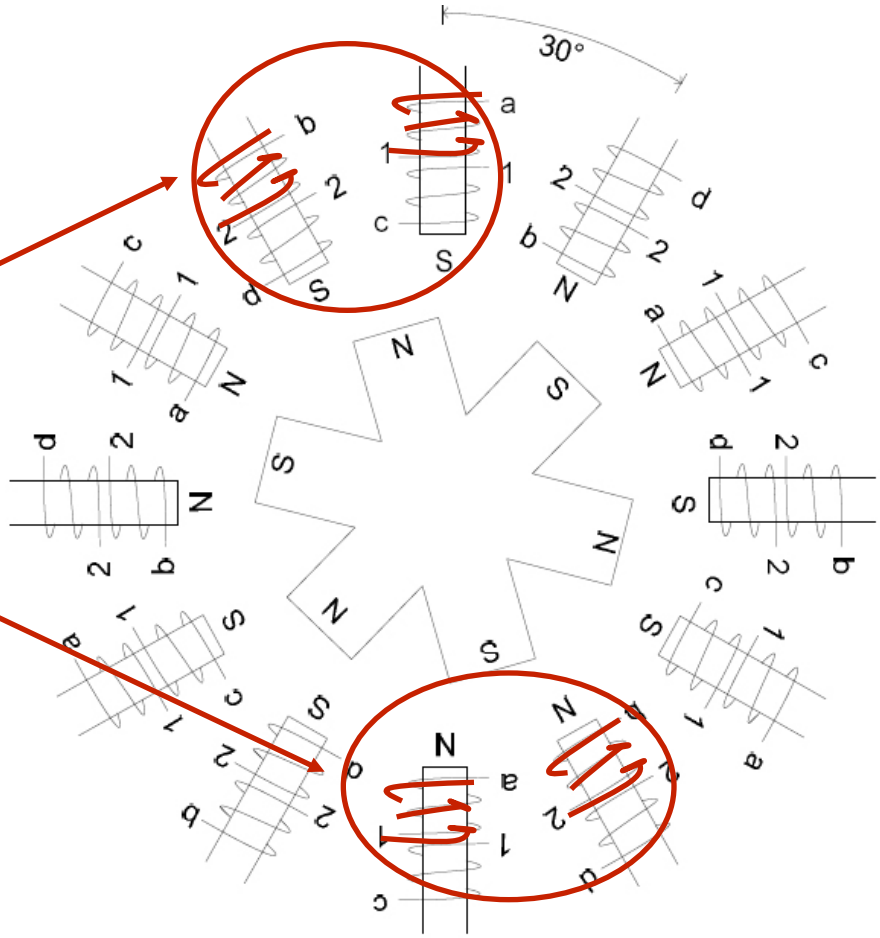

Phases ‘a’ and ‘b’ energized